Standard Inventory Item

6-284

0E2EA8 Manson

Manson Reamers
Contact us at:
support@mansonreamers.com
(810) 953-0732

8200 Embury Rd
Suite 1
Grand Blanc, MI 48439

6-284

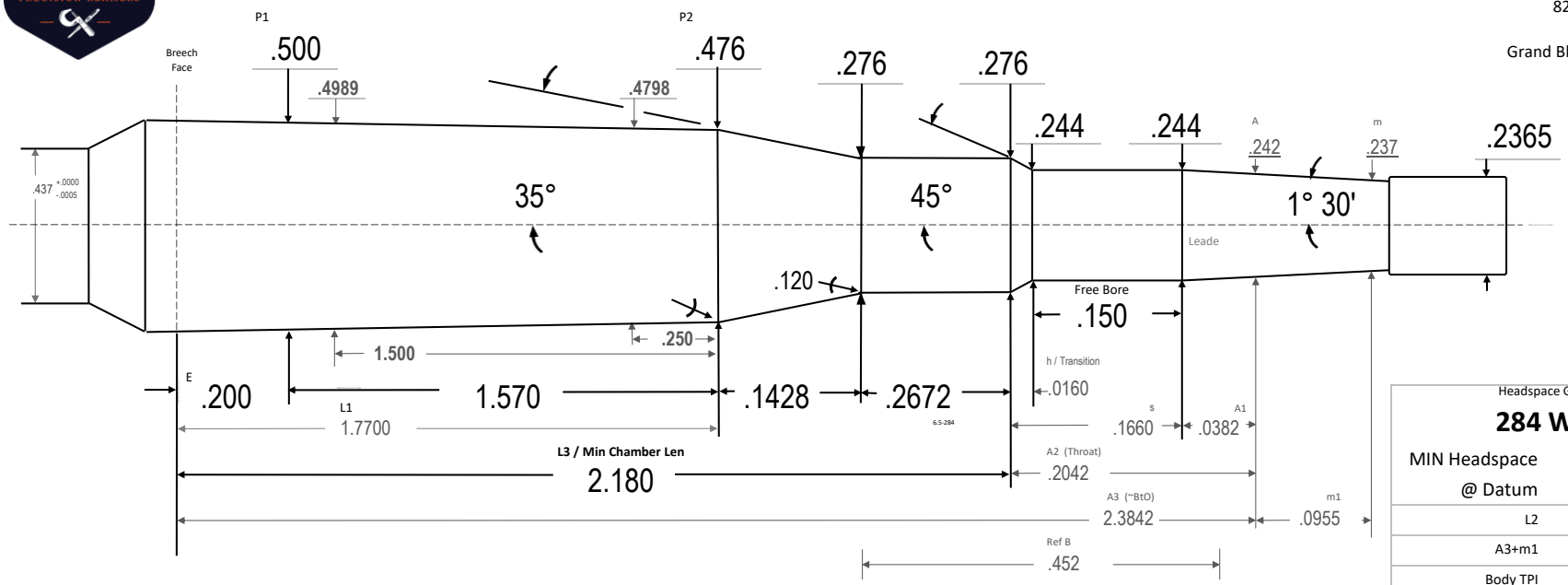

D Manson design. No neck turn with Lapua brass. Throat to suit Berger 105 hybrid and similar bullets.

Headspace Gage: **284 Win**	
MIN Headspace	1.8100
@ Datum	.4200
L2	1.9128 27
A3+m1	2.4796 71
Body TPI	.0152 87
Breech Face Dia	.5030 57
~Chamber Vol in^3	.3494 51
Drawn:	Ray Gross
SD	2024.05.24
Template PTL	V10.3 24.05.24
Dia Tolerance	+.001/-.000
Length Tolerance	+.005/-.000
Angle Tolerance	+/- 15'
Use Reamer Blank	284 Win, 6.5PRC
Print is not to scale	

6-284

6-284