Standard Inventory Item

25-06 Rem

94AE52 5/29/1979 4/06/2022

Revision

Manson Reamers

Contact us at:
support@mansonreamers.com
(810) 953-0732

8200 Embury Rd
Suite 1
Grand Blanc, MI 48439

25-06 Rem

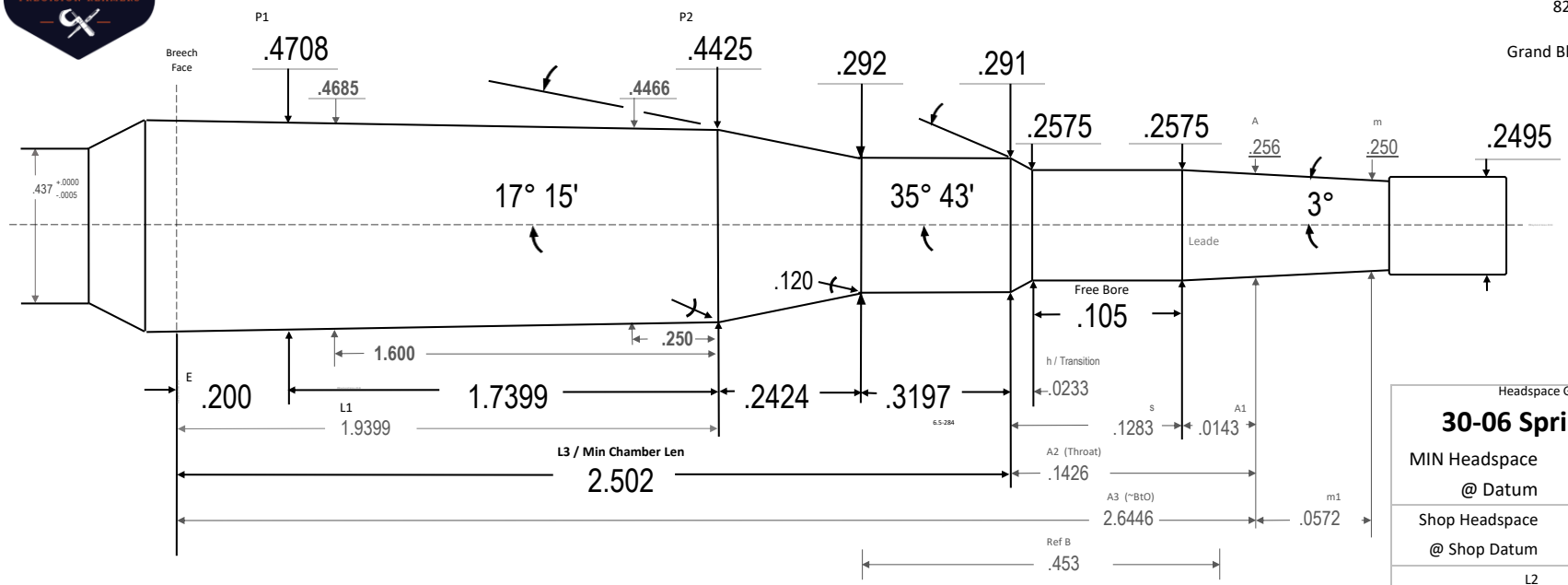

Verified SAAMI 2024 24.04.18rg

Reamers dated prior to 2023 will have a 2° 30' leade and 45° transition

Headspace Gage:	
30-06 Springfield	
MIN Headspace	2.0487
@ Datum	.3750
Shop Headspace	2.0487
@ Shop Datum	.3750
L2	2.1823 52
A3+m1	2.7018 43
Body TPI	.0162 42
Breech Face Dia	.4740 48
~Chamber Vol in^3	.3461 78
Drawn:	Ray Gross
SD	2024.06.07
Template PTL	V10.3 24.05.24
Dia Tolerance	+.001/-.000
Length Tolerance	+.005/-.000
Angle Tolerance	+/- 15'
Use Reamer Blank	280 Combo
Print is not to scale	

25-06 Rem

25-06 Rem