USER MANUAL

MUZZLE CROWN
REFACING TOOLKIT

CONTACT: Dave Manson Precision Reamers
Phone: 810-953-0732 Fax: 810-953-0735
E-mail: david@mansonreamers.com

Patent Number: US 6,758,005 B2

INTRODUCTION

Muzzle crown re-facing toolkit can be used to reface or completely form precision muzzle crown on rifle, shotgun and handgun barrels made from commonly used carbon, alloy or stainless steel, including chrome lined barrels. No further deburring, lapping or polishing of bore edge is necessary.

PREPARATION OF THE FIREARM

1. Make sure firearm is not loaded.

2. It is not necessary to disassemble firearm in order to perform muzzle crown re-facing procedure, except when working with the pistol. When working with the pistol barrel, it is recommended that pistol is field striped so that pilot does not interfere with the breech.

3. Secure firearm in a vise, preferably in vertical position with muzzle end of the firearm pointing up. If vise is not available or its use is not desirable, firearm can be just manually held by the second person. However, it is recommended that vise is used whenever possible, because it allows for better precision of muzzle crown re-facing and generally, faster completion of the work.

SELECTION AND USE OF PROPER PILOT

1. Select a pilot same diameter as a bore of the barrel. Use pilot selection table for assistance, if necessary.

2. Insert pilot into the bore, carefully pushing bore brush end of the pilot into the barrel bore. Pilot shoulder should be about 3/16" below muzzle end of the barrel. You can use pilot wrench as depth insertion gauge in accordance with PILOT INSERTION SETUP procedure (Fig.#1).

Warning! *Expandable collet must be loose (not expanded) and bore brush should slide into the bore without excessive force. Expandable pilot must always be completely positioned inside the bore. If barrel is too short (handgun barrel), and bore brush exists the chamber end of the barrel when pilot is in recommended position, holding bore brush by hand while performing step 3 is necessary (also see recommendation below)*

3. Turn the pilot clockwise with finger grip as tight as it is comfortable, then use pilot wrench and additionally rotate the pilot clockwise approximately 1/4 of a turn to expand collet until snug. Check if pilot is secured firmly inside the barrel bore by applying some side pressure with your hand, in several directions. If pilot wobbles, turn the pilot and expand the collet just a bit more. Do not overtighten to avoid damage to the collet. At the same time, consider that the accuracy of the muzzle crown cutting depends upon a tight fitting pilot inside the bore.

Recommendation: If you intend to crown handgun barrels often, and typical length of the barrel is in the range between 2.25 and 5 inches,it is highly recommended, although not necessary, to use elongated brushless pilot nut, which replaces standard pilot nut and is available as an optional accessory.

SELECTION AND USE OF MUZZLE CUTTERS

Things to remember: Carbide blades are set-up at the factory to cut muzzle end of the barrel with outside diameter of no more than 1 1/8 " and minimal bore diameter of 5.5 mm, but blades can be moved outward to increase outside diameter to 1 3/8" if necessary. If blades were moved or replaced, make sure that all screws holding blades in place are tight. To restore to original blade settings use BLADES SETUP procedure (Fig.#2)

TO COMPLETELY RECUT MUZZLE END AND TO FORM MUZZLE CROWN.

If muzzle is roughly machined, severely worn out or damaged:

1. It is highly recommended that facing (0 deg.) cutter is selected first to face and square off the muzzle end of the barrel.

2. Place cutter on pilot and slowly lower cutter to the muzzle end of the barrel. DO NOT DROP CUTTER.

3. Place cutter driver over hex of the cutter. Take the grip of the driver body by placing your fingers around lower(larger diameter) portion of the driver body. Such grip provides for holding the body of the driver as close to the cutter as possible, and allows for maintaining of the downward pressure close to centerline of a pilot. (Fig.#3)

4. Start slowly turning clockwise, using cutter driver handle with a round knob and apply some downward pressure to the body of driver, compressing the spindle spring inside the driver. Use one hand for turning and another hand for applying pressure simultaneously. Make several turns and slowly release pressure while still turning the driver.

Recommendation: Use any proven cutting coolant/lubricant while cutting. A few drops is usually quite sufficient, and helps to cut a certain metal alloys more aggressively. Use cleaning brush if necessary to remove metal chips accumulated on top and between serrations of the blades.

5. Remove both the driver and the cutter and inspect the muzzle end of the barrel. The size of pits, scratches and other imperfections on the face of the muzzle end will determine the amount of material that must be removed with the remaining cuts.

6. If more cuts need to be done, repeat steps from 2 to 5, until the face of the muzzle end is free of all imperfections. It may take from several cuts depending upon the initial condition of the muzzle end.

Recommendation: After muzzle end is completely faced and squared off, make a few turns of a cutter with a very low downward pressure. This will produce better final finish without noticeable removal of material. Use coolant/lubricant.

7. After the muzzle of the barrel is completely faced, remove facing cutter and select chamfering (11 deg.) cutter. Repeat steps from 2 to 4 until desired width of the crown is achieved.

Note: You will probably feel very low resistance while turning the driver in the beginning of chamfering. This is normal.

8. Remove chamfering cutter. If your toolkit includes deburring cutter, which is optional, select deburring cutter and repeat steps from 2 to 4 to break sharp edges or to form chamfer of desired width on the outside of the muzzle end.

9. Use pilot wrench and turn the pilot counterclockwise 1.5-2 turns to release the collet. Check if pilot is slightly loose (it should wobble). Grasp pilot firmly with your fingers and pull it out of the bore.

Recommendation: Sometimes it takes a bit more effort to pull the pilot out of the bore than to insert pilot into the bore. It happens because the brush bristles are moving against direction of brush insertion. If this appears to be the case, slowly push the pilot inside the bore, but no more than 1/8" or so, then grasp the pilot with your fingers as close to the muzzle as possible in such a manner that your thumb is positioned against the muzzle, and very slowly start pulling the pilot out using your thumb pushing against the muzzle.

Warning! *DO NOT USE pliers for pilot removal to avoid damage.*

PILOT SELECTION TABLE

Pistol Data

Caliber	Bore Diameter	Collet Size
22 LR	.217	.22/ 5.5 mm
22 WMR	.219	.22/ 5.5 mm
25 Auto	.243	6.0 mm
30 Mauser	.300	.30/ 7.5 mm
30 M1 Carbine	.300	.30/ 7.5 mm
30 Luger	.3008	.30/ 7.5 mm
32 S&W	.303	.30/ 7.5 mm
32 S&W Long	.303	.30/ 7.5 mm
32 H&R Magnum	.303	.30/ 7.5 mm
32 Auto	.304	.30/ 7.5 mm
9mm Luger	.346	.357/ (11/32)
38 Special	.346	.357/ (11/32)
357 Magnum	.346	.357/ (11/32)
38 Super Auto	.346	.357/ (11/32)
380 Auto	.348	.357/ (11/32)
38 S&W	.350	.357/ (11/32)
9mm Makarov	.3543	.357/ (11/32)
38-40 Winchester	.394	10.0 mm
40 S&W	.390	10.0 mm
10mm Auto	.390	10.0 mm
41 Remington Magnum	.399	10.0 mm
41 Action Express	.399	10.0 mm
44 S&W Special	.417	.44/ 10.5 mm
44 Remington Magnum	.417	.44/ 10.5 mm
44 Auto Mag	.417	.44/ 10.5 mm
44-40 Winchester	.423	.44/ 10.5 mm
45 Auto	.442	.45
45 Colt	.442	.45
45 Winchester Magnum	.442	.45
454 Casull Magnum	.442	.45
45 Auto Rim	.444	.45
50 AE	.490	.50/ (1/2), please consult Dave Manson

Rifle Data

Caliber	Bore Diameter	Collet Size
17 Ackley Bee	.172”	Special, consult Dave Manson
17 Mach IV	.172”	Special, consult Dave Manson
17 Remington	.172”	Special, consult Dave Manson
5.45x39 Russian	.212”	.22 (only this size, 5.5 mm will not fit 5.45)
22 LR	.217	.22/ 5.5 mm

Caliber	Bore Diameter	Collet Size
22 Hornet	.217	.22/ 5.5 mm
218 Bee	.218	.22/ 5.5 mm
22 WMR	.219	.22/ 5.5 mm
222 Remington	.219	.22/ 5.5 mm
223 Remington	.219	.22/ 5.5 mm
222 Remington Magnum	.219	.22/ 5.5 mm
22 PPC	.219	.22/ 5.5 mm
22 BR Remington	.219	.22/ 5.5 mm
224 Weatherby Magnum	.219	.22/ 5.5 mm
219 Wasp	.219	.22/ 5.5 mm
225 Winchester	.219	.22/ 5.5 mm
22-250 Remington	.219	.22/ 5.5 mm
220 Swift	.219	.22/ 5.5 mm
220 Jaybird	.219	.22/ 5.5 mm
22 Cheetah Mark II	.219	.22/ 5.5 mm
6MM-222	.237	6.0 mm
6 X 45MM	.237	6.0 mm
6MM X 222 Magnum	.237	6.0 mm
6MM PPC	.237	6.0 mm
6MM B.R. Remington	.237	6.0 mm
243 Winchester	.237	6.0 mm
244 Remington	.237	6.0 mm
6MM Remington	.237	6.0 mm
6MM-284	.237	6.0 mm
240 Weatherby Magnum	.237	6.0 mm
25-20 WCF	.250	.25/ (1/4)
256 Winchester Magnum	.250	.25/ (1/4)
25-35 Winchester	.250	.25/ (1/4)
257 Kimber	.250	.25/ (1/4)
250-3000 Savage	.250	.25/ (1/4)
257 Roberts	.250	.25/ (1/4)
25/284	.250	.25/ (1/4)
25-06 Remington	.250	.25/ (1/4)
257 Weatherby Magnum	.250	.25/ (1/4)
6.5 X 50MM Japanese	.2515	.25/ (1/4)
6.5 X 68MM Schuler	.254	.25/ (1/4)
6.5 Carcano	.256	6.5 mm
6.5 X 257	.256	6.5 mm
6.5 X 55MM Swedish	.256	6.5 mm
6.5MM Remington Magnum	.256	6.5 mm
264 Winchester Magnum	.256	6.5 mm
270 Winchester	.270	.270/ (17/64)
270 Weatherby Magnum	.270	.270/ (17/64)
284 Winchester	.2755	7.0 mm
7 X 57MM Mauser	.276	7.0 mm
7MM Weatherby Magnum	.2765	7.0 mm
7-30 Waters	.277	7.0 mm
7MM-08 Remington	.277	7.0 mm
280 Remington	.277	7.0 mm

Caliber	Bore Diameter	Collet size
7MM Remington Express	.277	7.0 mm
7MM Remington Magnum	.277	7.0 mm
7.5 X 55 Swiss	.297	.30/ 7.5 mm
30 M1 Carbine	.300	.30/ 7.5 mm
30-30 Winchester	.300	.30/ 7.5 mm
30-40 Krag	.300	.30/ 7.5 mm
300 Savage	.300	.30/ 7.5 mm
307 Winchester	.300	.30/ 7.5 mm
308 Winchester	.300	.30/ 7.5 mm
7.62MM NATO	.300	.30/ 7.5 mm
30/06	.300	.30/ 7.5 mm
308 Norma Magnum	.300	.30/ 7.5 mm
300 Winchester Magnum	.300	.30/ 7.5 mm
7.62 X 39MM Russian	.300	.30/ 7.5 mm
7.62 X 54R Russian	.300	.30/ 7.5 mm
300 Weatherby Magnum	.3005	.30/ 7.5 mm
7.65 X 53MM Mauser	.301	.30/ 7.5 mm
7.7 X 58MM Japanese	.303	.30/ 7.5 mm
303 British	.303	.30/ 7.5 mm
32/40 Winchester	.305	.30/ 7.5 mm
32-20 Winchester	.305	.30/ 7.5 mm
8MM Mauser	.311	8.0 mm
32 Winchester Special	.315	8.0 mm
8MM Remington Magnum	.315	8.0 mm
338-06	.330	.338/ 8.4 mm
338 Winchester Magnum	.330	.338/ 8.4 mm
340 Weatherby Magnum	.330	.338/ 8.4 mm
348 Winchester	.340	.348/ (11/32)
35 Remington	.349	.357/ (11/32)
35 Whelen	.349	.357/ (11/32)
350 Remington Magnum	.349	.357/ (11/32)
356 Winchester	.350	.357/ (11/32)
358 Winchester	.350	.357/ (11/32)
375 Winchester	.366	.375/ 9.2 mm
375 H&H Magnum	.366	.375/ 9.2 mm
375 Weatherby Magnum	.366	.375/ 9.2 mm
378 Weatherby Magnum	.367	.375/ 9.2 mm
38-55 Winchester	.373	.375/ 9.2 mm
416 Rigby	.4079	.416/ 10.5 mm
416 Remington Magnum	.408	.416/ 10.5 mm
416 Weatherby Magnum	.408	.416/ 10.5 mm
44-40 Winchester	.4225	.44/ 10.5 mm
444 Marlin	.424	.44/ 10.5 mm
45/70	.450	.458/ 11.5 mm
458 Winchester Magnum	.450	.458/ 11.5 mm
460 Weatherby Magnum	.4505	.458/ 11.5 mm
470 Nitro Express	.4587	.458/ 11.5 mm
50 Browning Machine Gun	.500	.50/ (1/2)
Other calibers		Please call Dave Manson

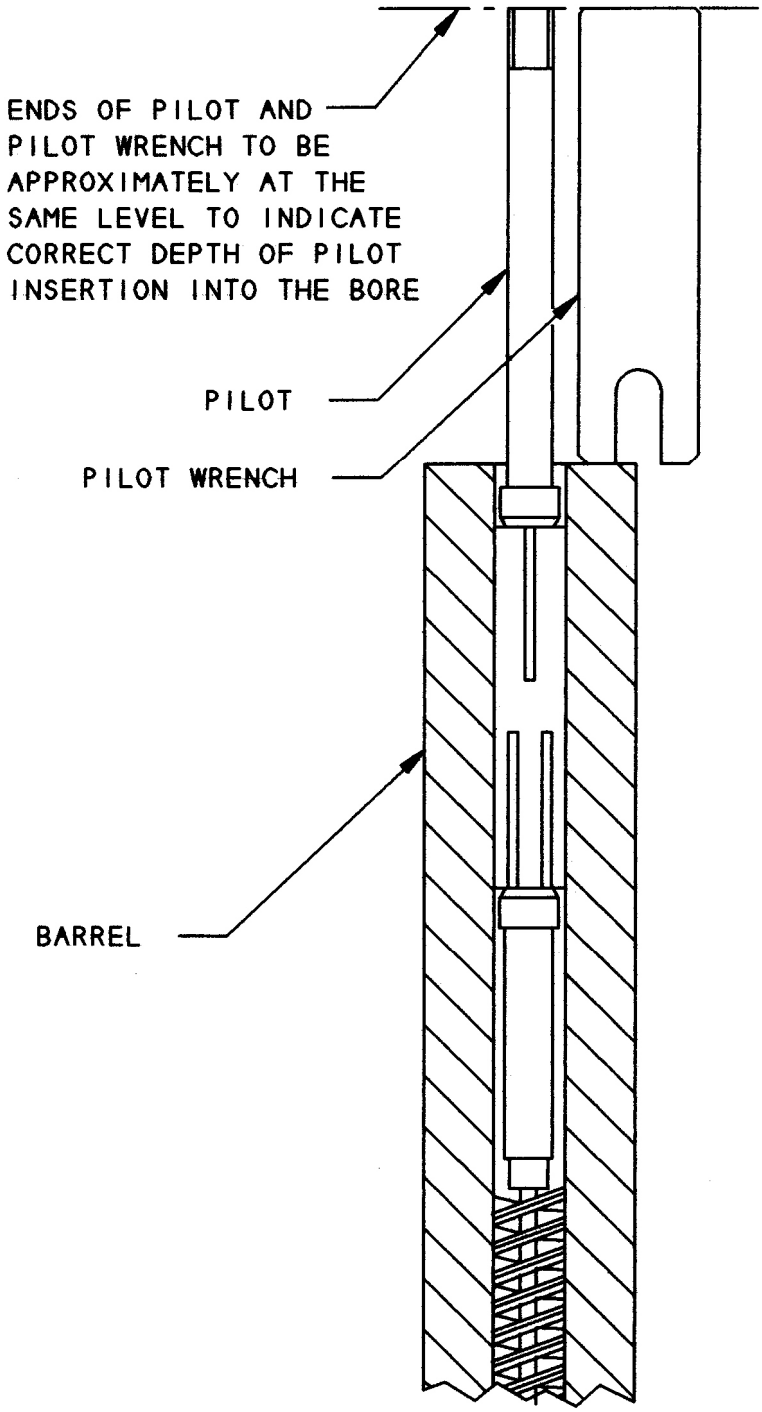

Fig.#1. Set-up procedure for pilot insertion into the barrel bore

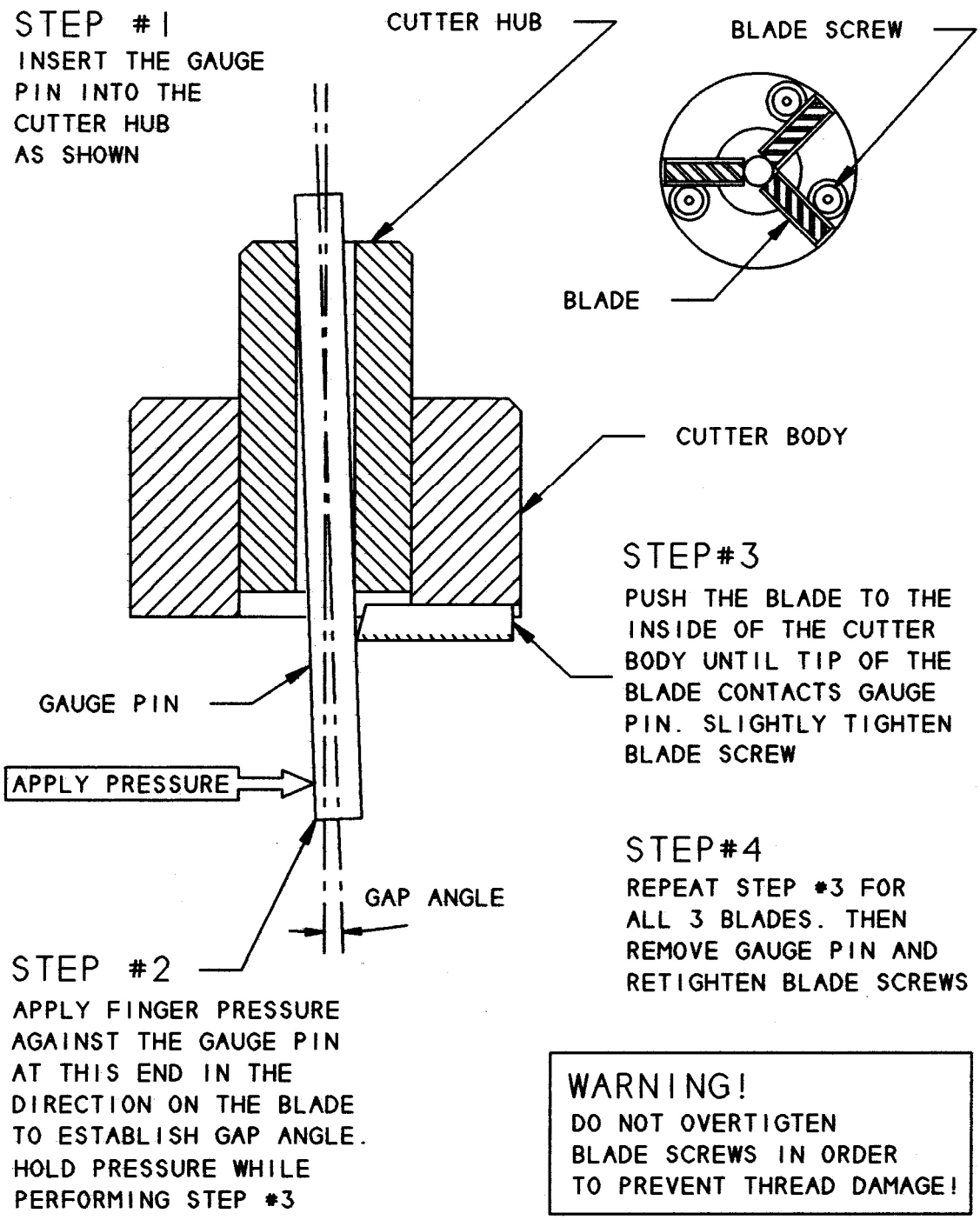

Fig.#2. Blade set-up procedure for facing and chamfering cutters

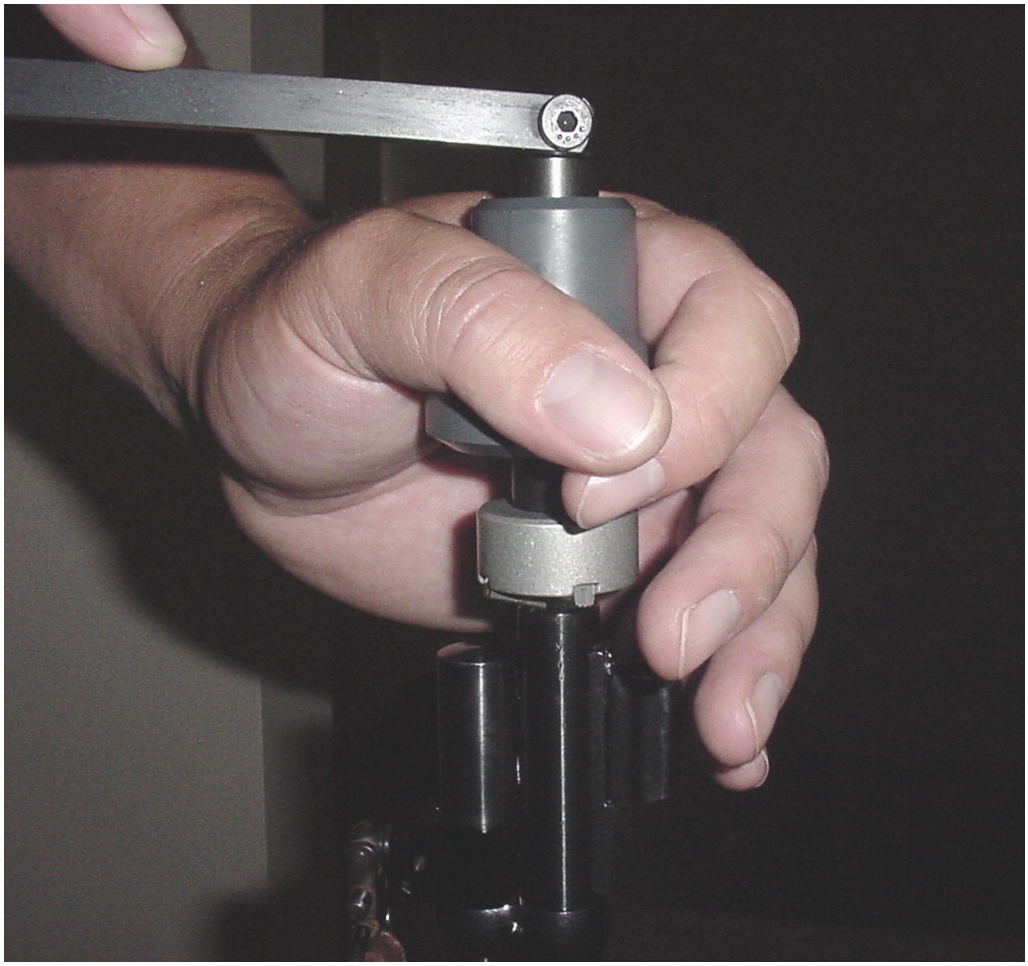

Fig.#3. Recommended method of holding the driver